CPA-25M.AVY.ORG

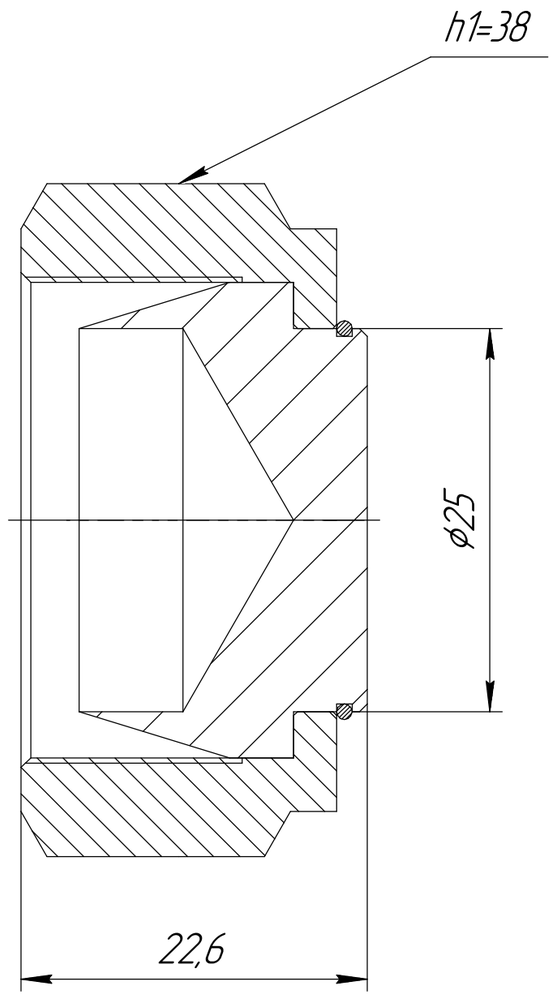

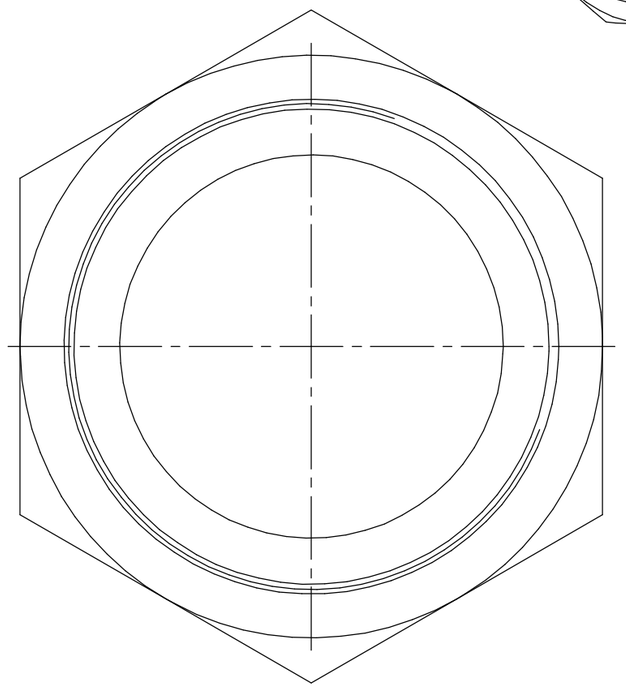

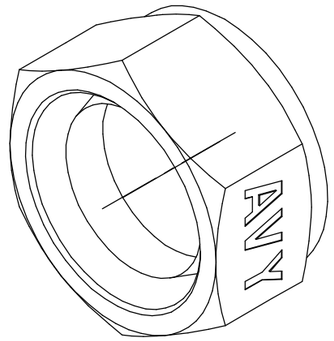

1. h1 –Hex size
2 Temperature rating from –196 to 649°C

					CPA-25M.AVY.ORG		
Ch.	Sheet	№ doc.	Sign.	Date	Port plug for Hy-lok fitting	Char. / Weight	Scale 2.5:1
Develop.							
Checked							
Tech. contr.						Sheet	Sheets 1
Req. contr.						HY-LOK CORPORATION	
Approv.							

Copied

Format A3

First mention

Reference №

Sign. and date

Inv. № copy

Exch. inv. №

Sign. and date

Inv. № orig.