H1B-F-4G-ML.AVY.ORG

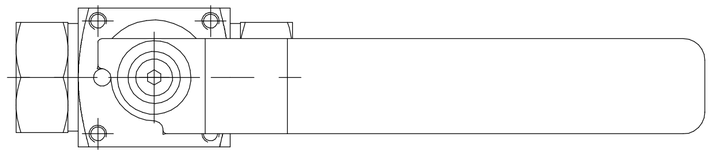

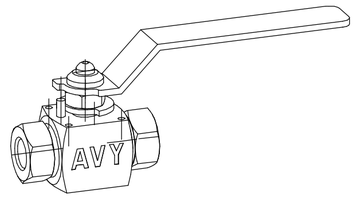

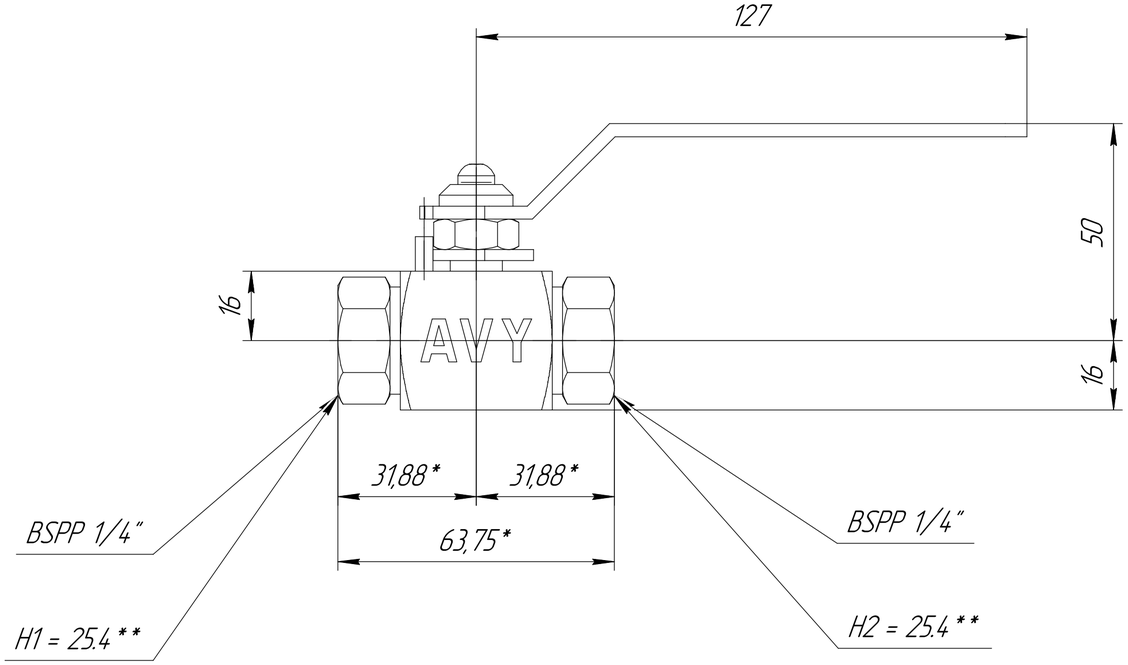

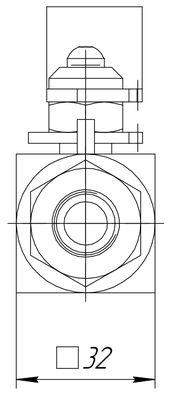

1. *This size may depend on the degree of tightening
2. ** Hex size
3 Pressure rating 414bar (T = 21 °C)
4 Temperature rating from -30 to 130°C

					H1B-F-4G-ML.AVY.ORG		
Ch.	Sheet	№ doc.	Sign.	Date	Ball Valve	Char. / Weight	Scale 1:1
Develop.							
Checked						Sheet	Sheets 1
Tech. contr.							
Reg. contr.						HY-LOK CORPORATION	
Approv.							

First mention | Reference № | Sign. and date | Inv. № copy | Exch. inv. № | Sign. and date | Inv. № orig.

Copied | Format A2