H2B-F-12R.AVY.ORG

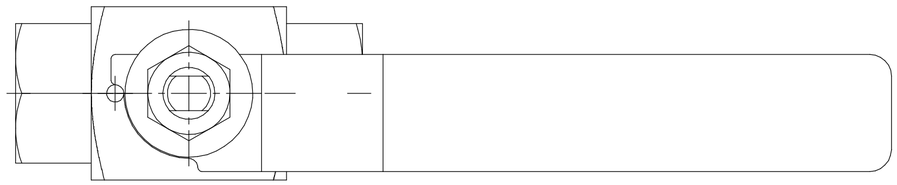

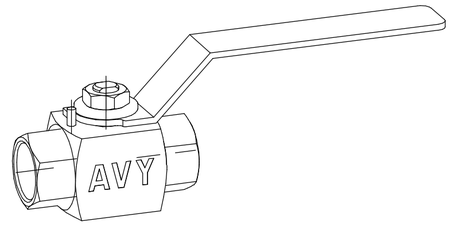

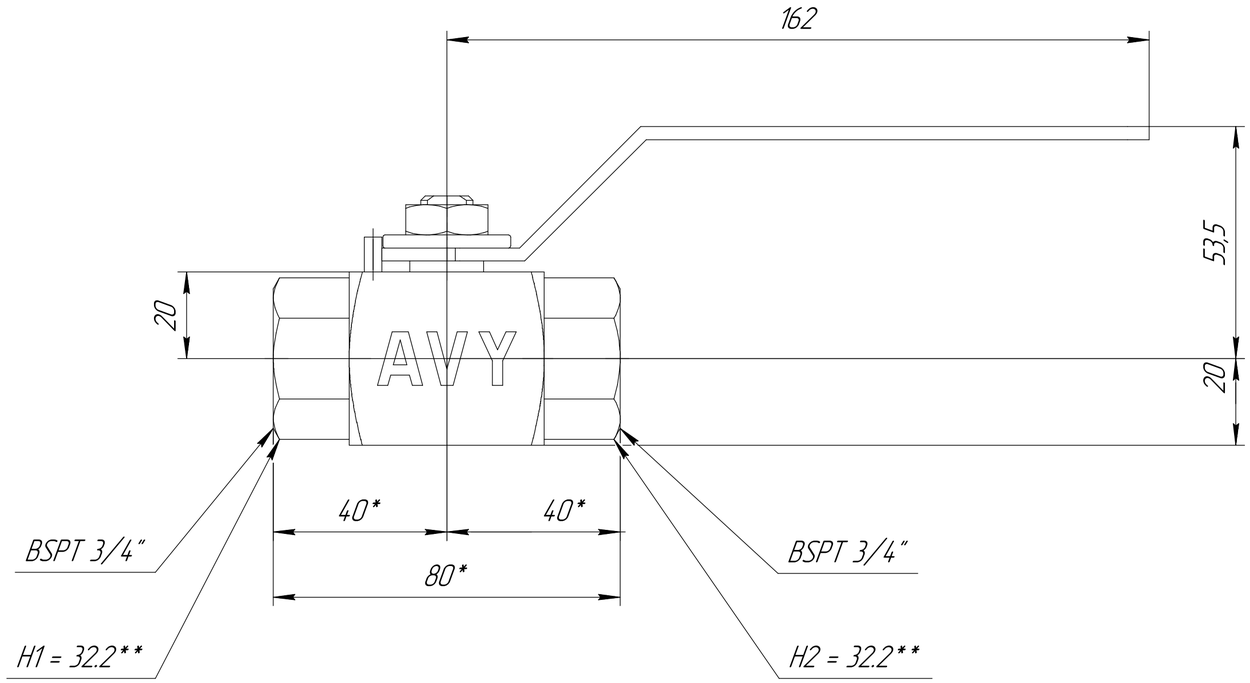

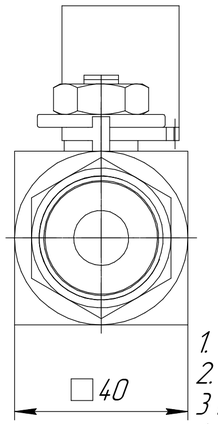

1. *This size may depend on the degree of tightening
2. ** Hex size
3 Pressure rating 340bar (T = 21 °C)
4 Temperature rating from -23 to 191°C

					H2B-F-12R.AVY.ORG		
Ch.	Sheet	№ doc.	Sign.	Date	Ball Valve	Char. / Weight	Scale 1:1
Develop.							
Checked						Sheet	Sheets 1
Tech. contr.							
Reg. contr.						HY-LOK CORPORATION	
Approv.							

Copied

Format A2

First mention

Reference №

Sign. and date

Inv. № copy

Exch. inv. №

Sign. and date

Inv. № orig.