H-SNA-2NR.AVY.ORG

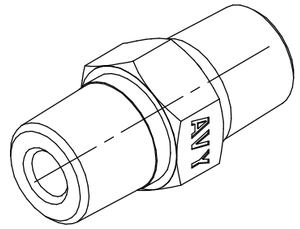

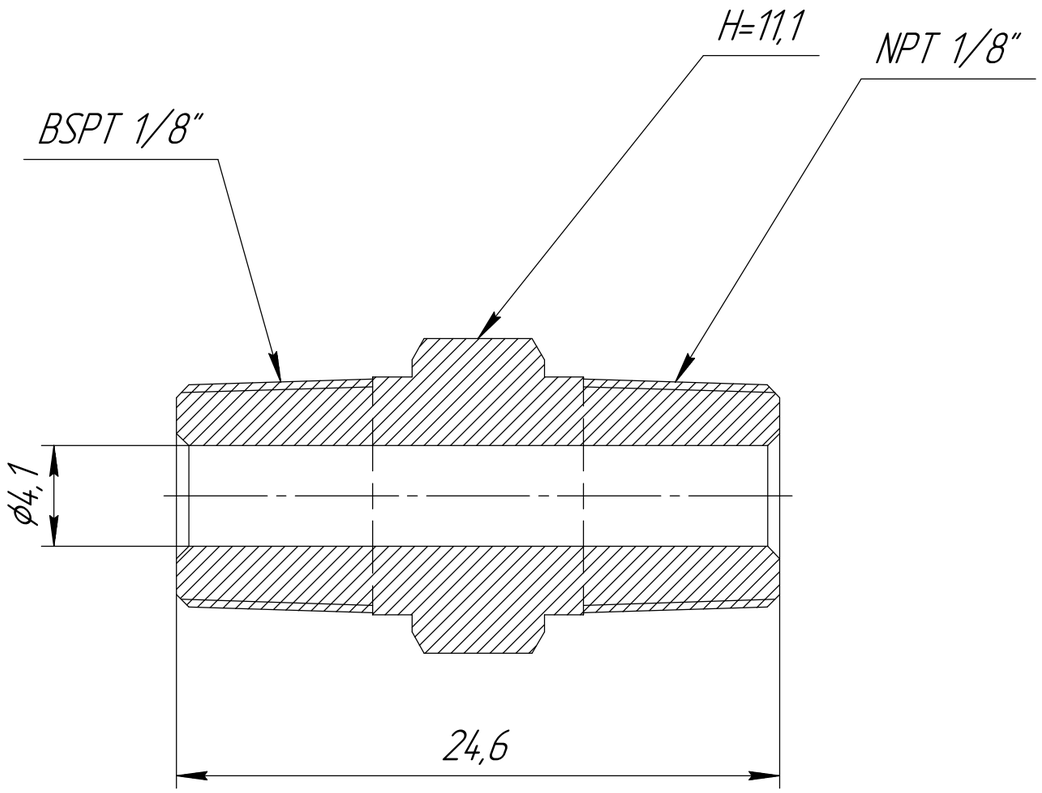

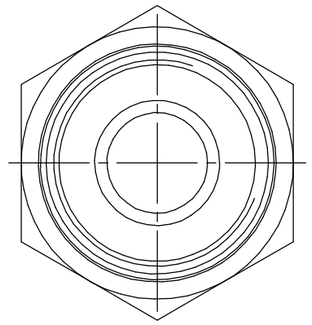

1. H – Hex size
2 Temperature rating from –196 to 649°C

					H-SNA-2NR.AVY.ORG			
Ch.	Sheet	№ doc.	Sign.	Date	Соединитель с наружными резьбами	Char.	Weight	Scale
Develop.								4:1
Checked						Sheet	Sheets 1	
Tech. contr.								
						HY-LOK CORPORATION		
Reg. contr.								
Approv.								

First mention | Reference № | Sign. and date | Inv. № copy | Exch. inv. № | Sign. and date | Inv. № orig.

Copied

Format A3