H-SLCR-4-2N.AVY.ORG

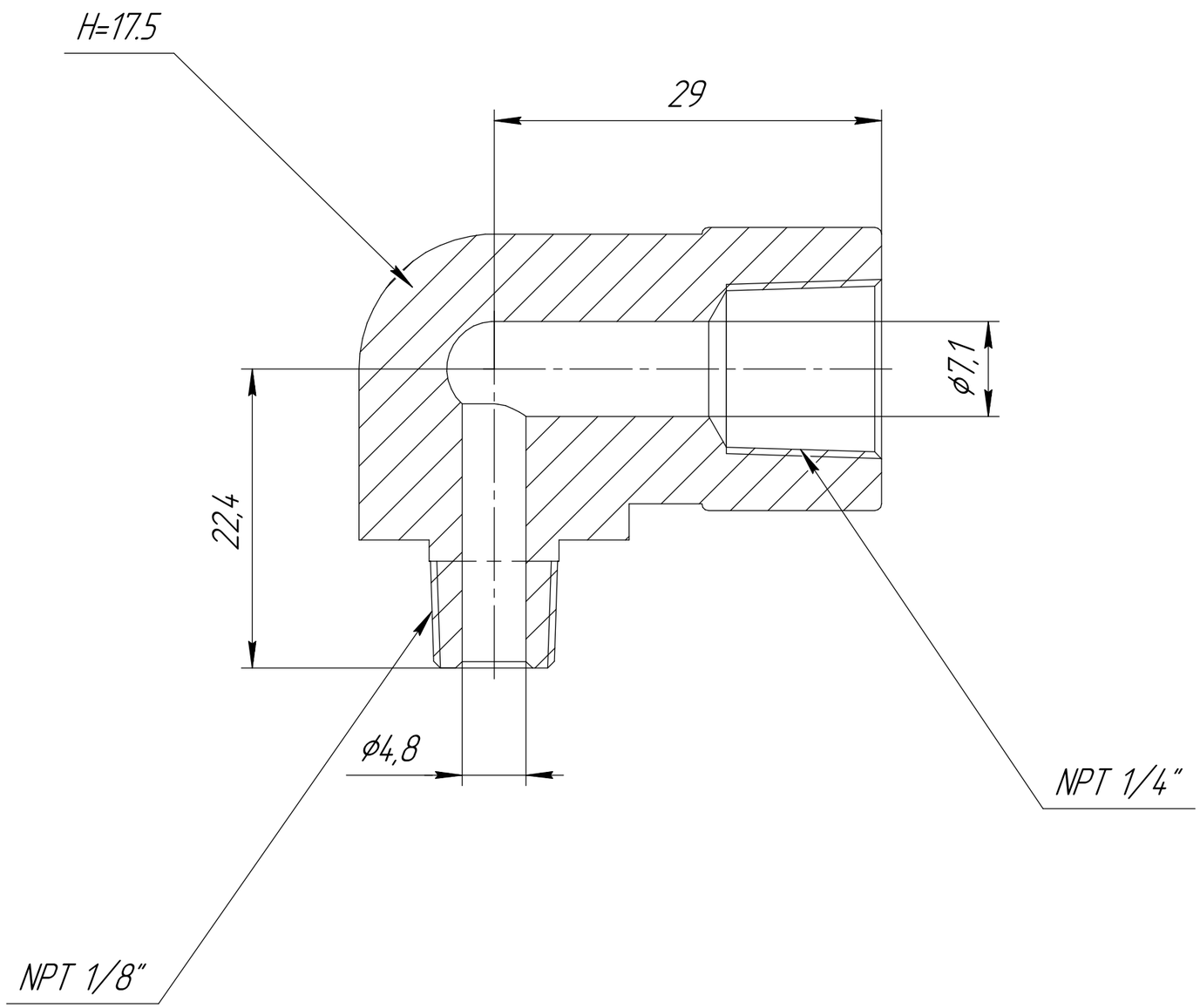

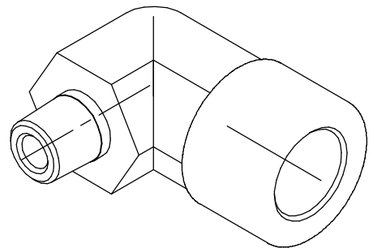

1. H – Hex size
2 Temperature rating from –196 to 649°C

					H-SLCR-4-2N.AVY.ORG		
Ch.	Sheet	№ doc.	Sign.	Date	Reducing elbow male to female connector	Char. / Weight	Scale 2.5:1
Develop.							
Checked							
Tech. contr.						Sheet	Sheets 1
Req. contr.						HY-LOK CORPORATION	
Approv.							

Copied

Format A3

First mention | Reference № | Sign. and date | Inv. № copy | Exch. inv. № | Sign. and date | Inv. № orig.