H-SLC-8N.AVY.ORG

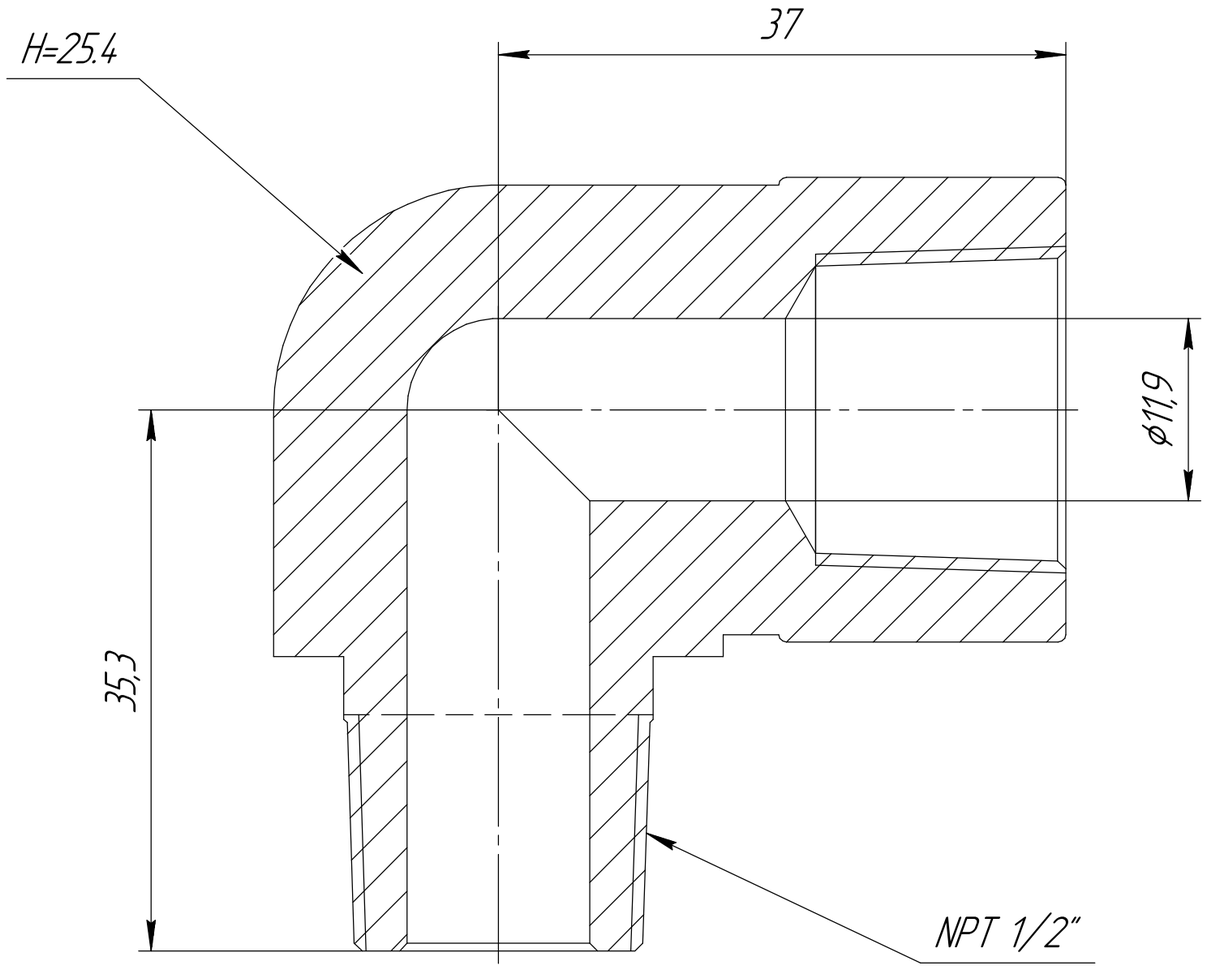

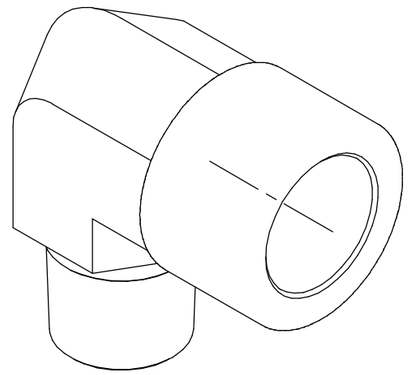

1. H – Hex size
2 Temperature rating from –196 to 649°C

Ch.	Sheet	№ doc.	Sign.	Date	H-SLC-8N.AVY.ORG
Develop.					Elbow male to female connector
Checked					
Tech. contr.					
Req. contr.					
Approv.					

Char.	Weight	Scale
		2.5:1
Sheet	Sheets 1	

HY-LOK CORPORATION

Copied

Format A3

First mention

Reference №

Sign. and date

Inv. № copy

Exch. inv. №

Sign. and date

Inv. № orig.