H-SBT-4N.AVY.ORG

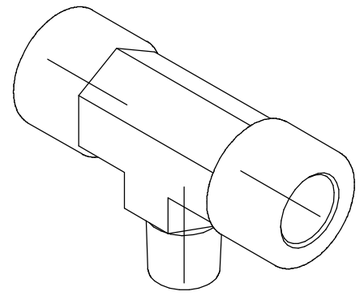

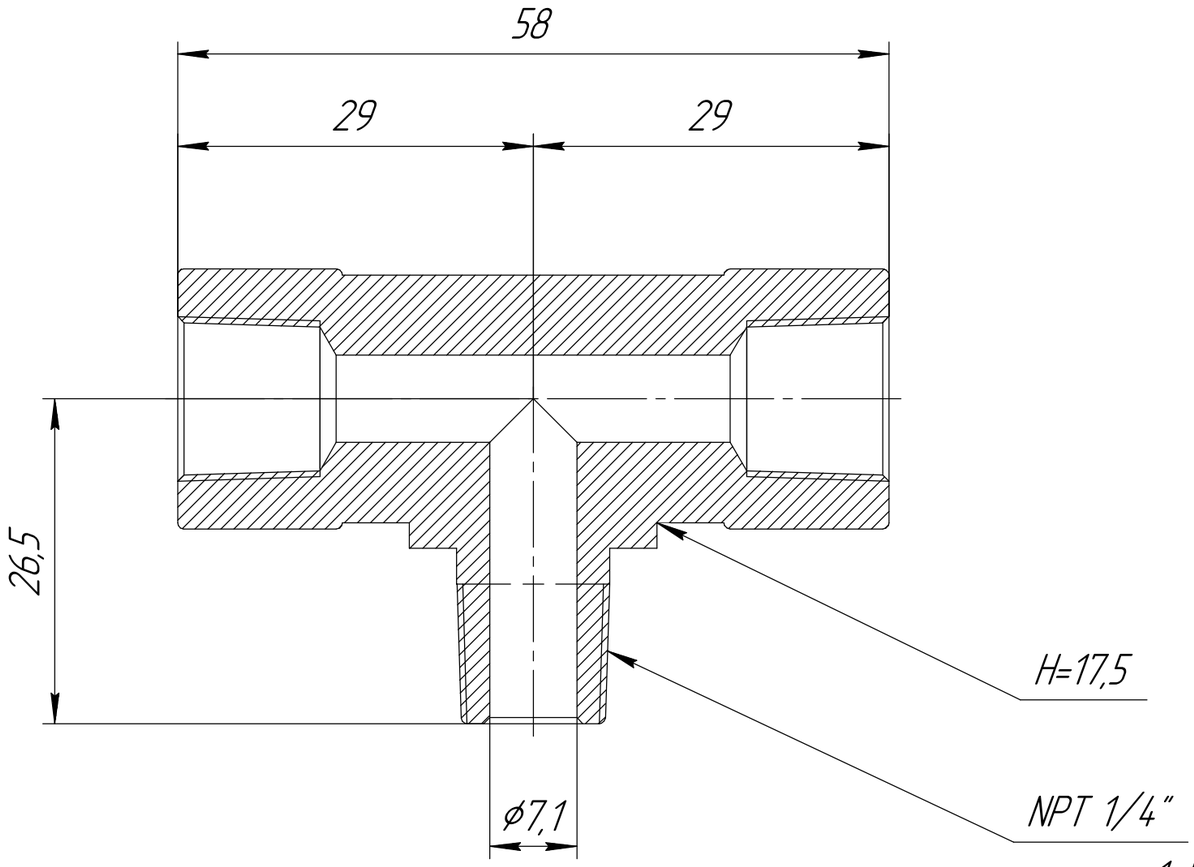


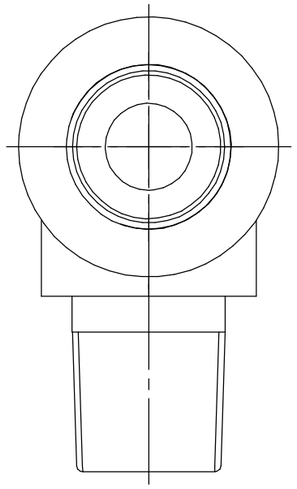

1. H – Hex size
2 Temperature rating from –196 to 649°C

| | | | | | | | |
|---|---|---|---|---|---|---|---|
| | | | | | H-SBT-4N.AVY.ORG | | |
| Ch. | Sheet | № doc. | Sign. | Date | Тройник с внутренними и наружной резьбами по отводу | Char. / Weight | Scale 2:1 |
| Develop. | | | | | | | |
| Checked | | | | | | | |
| Tech. contr. | | | | | | Sheet | Sheets 1 |
| Reg. contr. | | | | | | HY-LOK CORPORATION | |
| Approv. | | | | | | | |

First mention | Reference № | Sign. and date | Inv. № copy | Exch. inv. № | Sign. and date | Inv. № orig.

Copied

Format A3