CUA-3.AVY.ORG

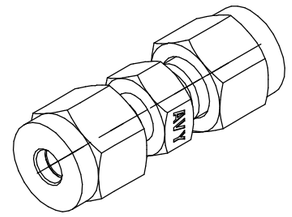

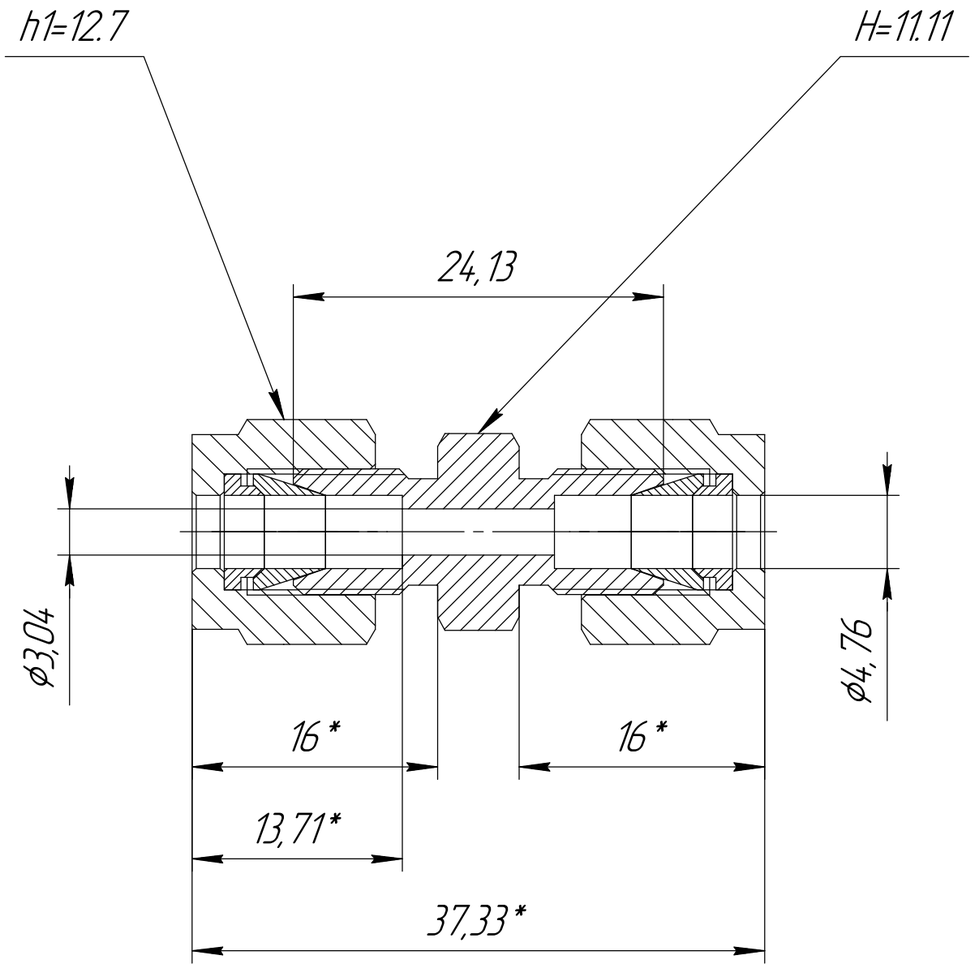

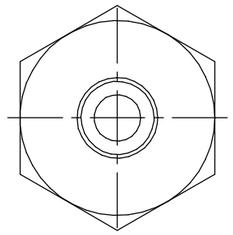

1. H and h1 – Hex sizes
2. *This size may depend on the degree of tightening
3 Temperature rating from –196 to 649°C

					CUA-3.AVY.ORG			
Ch.	Sheet	№ doc.	Sign.	Date	Union	Char.	Weight	Scale
Develop.								2.5:1
Checked						Sheet	Sheets 1	
Tech. contr.								
Req. contr.						HY-LOK CORPORATION		
Approv.								

Copied

Format A3

First mention | Reference № | Sign. and date | Inv. № copy | Exch. inv. № | Sign. and date | Inv. № orig.